# NT1 Signature Series

STUDIO CONDENSER MICROPHONE

The NT1 Signature Series is the latest edition of the iconic RØDE NT1 studio condenser microphone. With the same warm, silky character that has made the NT1 the go-to microphone for millions of creators, the NT1 Signature Series delivers classic studio sound for a wide range of applications, from vocal and instrument recording to voice overs, podcasting, streaming and content creation. It features RØDE's HF6 1-inch true condenser capsule, which delivers rich bass, detailed midrange and sparkling top end, with a smooth frequency response and tight cardioid polar pattern. Extremely low noise of just 4dB ensures every recording is incredibly clean and high SPL handling capabilities mean the NT1 Signature Series excels at recording even the loudest sounds, making it a true studio workhorse. The NT1 Signature Series comes with a studio-grade shock mount, pop filter and XLR cable, and is made from premium components in RØDE's precision facilities in Sydney, Australia.

- Large-diaphragm cardioid condenser microphone
- HF6 1-inch true condenser capsule
- Smooth frequency response, high sensitivity and high SPL handling
- Extremely low noise (4dBA) – the world's quietest studio condenser microphone
- Available in a range of colours to suit any aesthetic
- Highly durable finish – extremely resistant to scuffs and scratches
- Studio-grade shock mount and pop filter and XLR cable included
- Designed and made in RØDE's precision manufacturing facilities in Sydney, Australia

Black Blue Green Purple Pink Red Orange Cobalt White

HF6 1" CONDENSER CAPSULE

XLR CABLE INCLUDED

10 YEAR WARRANTY

SHOCK MOUNT & DETACHABLE POP FILTER

## ACOUSTIC & ELECTRICAL SPECIFICATIONS

| | |
|---|---|
| Acoustic Principle: | Pressure gradient |
| Active Electronics: | JFET impedance converter with bipolar output buffer |
| Capsule: | 1.00" |
| Polar Pattern: | Cardioid |
| Address Type: | Side |
| Frequency Range: | 20Hz - 20kHz |
| Output Impedance: | 100Ω |
| Maximum SPL: | 142 dB SPL |
| Equivalent Noise (A-Weighted): | 4dBA |
| Sensitivity: | -32 dB re 1 Volt/Pascal (25 mV @ 94 dB SPL) +/- 2 dB @ 1 kHz |
| Analogue Power Requirements: | P48 |
| Analogue Output Connection: | 3-pin XLR |

rode.com

RØDE

## MECHANICAL SPECIFICATIONS

| | |
|---|---|
| Weight (grams): | 313 |
| Dimensions (millimetres): | Length: 52<br>Width: 52<br>Height: 189 |

## WHAT'S IN THE BOX

NT1 Signature Series Microphone

SM6

XLR Cable

## DIMENSIONS

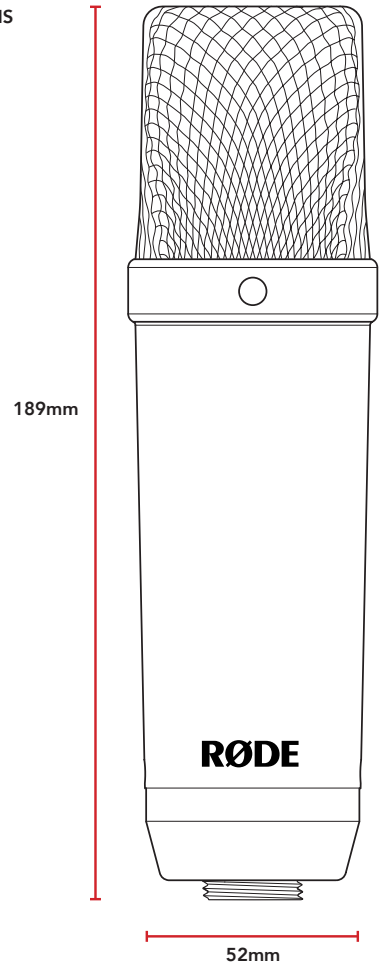


## POLAR PATTERN

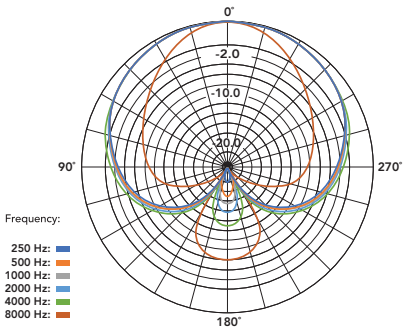

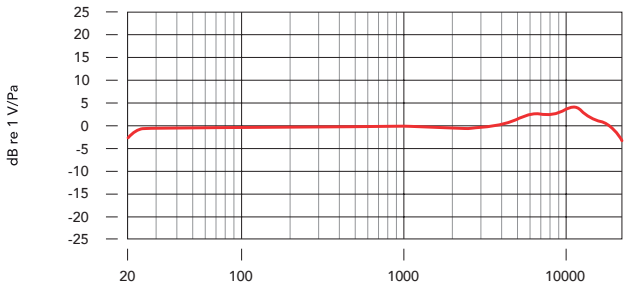
## FREQUENCY RESPONSE